NARGESA®

PROPANE FORGING FURNACE

H3

WARRANTY 3 THREE YEARS

MADE IN SPAIN MADE IN

CERTIFICATE Nº 18 RG014

+ than 40 years

manufacturing industrial machinery

Forging Furnaces Nargesa are used in blacksmiths workshops for ornamental forge, moulding iron up to achieving the desired shapes.

+info

REQUEST QUOTATION

Please fill up the following form. We will contact you in less than 24 hours.
Working days

REQUEST ADJUSTED QUOTATION

VIDEO MACHINE OPERATION

Machine performance video

Follow us on

PRADA NARGESA, S.L.
Ctra. De Garrigàs a Sant Miquel s/n
17476 Palau de Santa Eulàlia (Girona) Spain
Tel. +34 972 568 085
www.nargesa.com
nargesa@nargesa.com

If you're looking for a clean, safe flame which makes you turn steel into its red hot point so you can shape it, the Propane Furnace Nargesa is the one. It will be for sure your best choice!

Horseshoes

Forging decoration

Knives
Swords
Axes

All sort of designs for artistic forging

Iron garden furniture

Sculptures in iron

Wrought iron chairs and tables

It is a good substitute for the old Forge, much cleaner, faster and more efficient

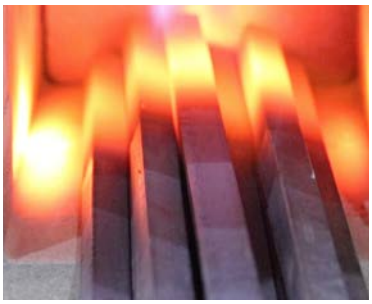

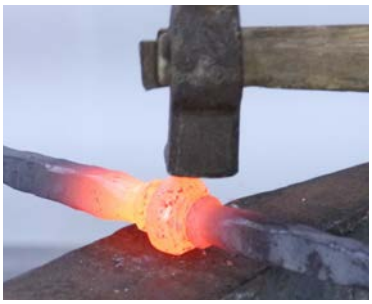

+info H1

1 BURNER

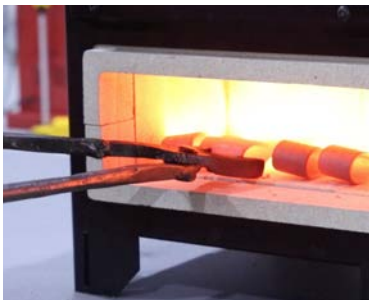

+info H2

2 BURNERS

+info H3

3 BURNERS

PROPANE FORGING FURNACES

NEW Propane forging furnaces Nargesa are equipped with one, two or three burners to heat the iron and work it: molding, bending, piercing, welding, tempering, forging, shoeing horses...

SAFER

It has got new security systems for the operator. Fulfilling the regulation RD919/2006. Certified by the Technological Center APPLUS, General Laboratory for Testing and Investigation.

MORE EFFICIENT

Consume up to 75% less gas and reach a higher temperature than any oven in its category. More than 1300ºC.

RESPECTFUL WITH THE ENVIRONMENT

Emissions below 0.002% of CO. Internal vermiculite coating, 100% natural and recyclable.

SAFETY OF THE OPERATOR

The safety of the operator is one of the main premises when designing all Nargesa machines. The H3 forging furnace has got all the necessary safety devices for the well-being of the operator that will handle it and it is according to the Regulation of appliances that use gas as fuel RD919 / 2006.

Automatic electronic ignition

Prevents the operator from inserting his hands in the combustion chamber to turn on the gas. No tool is necessary to generate the spark.

Gas system integrated in the oven structure

The components were totally protected from impacts that could damage and cause leaks.

Insulation of the combustion chamber

These elements are formed by a 100% natural material, compacted vermiculite, not harmful to health. 100% recyclable as it does not include glass fibers or ceramics.

Thermocouple safety valve

This device closes the passage of the gas when the combustion chamber cools due to an anomaly, avoiding any possible leak.

Anti-return valve

This valve regulates the direction of the gas flow preventing it from being addressed to the cylinder.

ENERGY EFFICIENCY

Saving energy is another topic that our R & D department takes into account for the furnace.

Fuel consumption

The consumption of Nargesa furnaces has been reduced in a 75%, that is to say, it consumes 1/4 of the fuel used by the same furnaces in its category. With a LPG propane gas cylinder of 35Kg, the H3 Furnace will operate 35 hours with its three burners at full operation. If we only use one burner, then performance will triplicate.

Gas losses

There is no fuel, all the propane gas that enters the combustion chamber burns, without any sort of waste. This process has been possible due to the new burners, which have been designed and manufactured by Nargesa.

RESPECT FOR THE ENVIRONMENT

It is totally unfeasible to manufacture machinery and not to take into consideration the planet we inhabit.

New generation insulating material

The insulating material of the combustion chamber, the compacted vermiculite, is a 100% recyclable material and does not generate waste, increasing the heating (thermic) power of the cavity, over 1300ºC.

CO Emissions

The emissions emitted by the furnace are 0.002%. In normal environment this value is between 0 and 2. Certified by the General Laboratory of Tests and Investigations: APPLUS Technology Center.

Applus certification

TECHNICAL FEATURES

All burners can operate independently

A vermiculite separator is supplied with the Oven to reduce the size of the combustion chamber and thus the heat is not dispersed.

Insulation of vermiculite

Double insulation of compacted vermiculite, to avoid heat loss. Insulating flange in the material inlets to keep the heat inside the combustion chamber.

Painting

The furnace is covered with heat painting to protect.

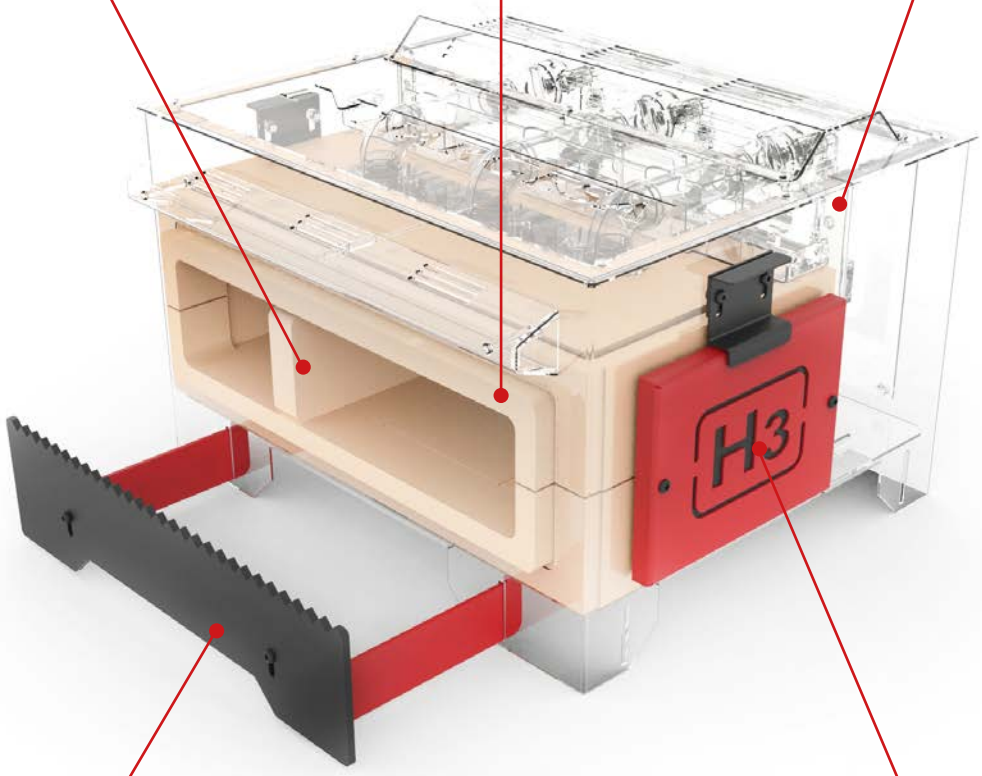

Integrated bar support and adjustable to the different lengths of material

Its shape prevents the material from sliding laterally.

Removable side doors

To work in the center of the iron bars. The doors are installed without using tools.

All components are standard and easy to find in any warehouse or hardware store

Air flow regulator

To adjust this size to the different altitudes. Depending on the work place of the furnace and its altitude regarding the sea, the air flow for the mixture of gas and marine air will be regulated, the suitability for a good combustion.

Needle flow regulation valves

Allow the accurate regulation of gas flow.

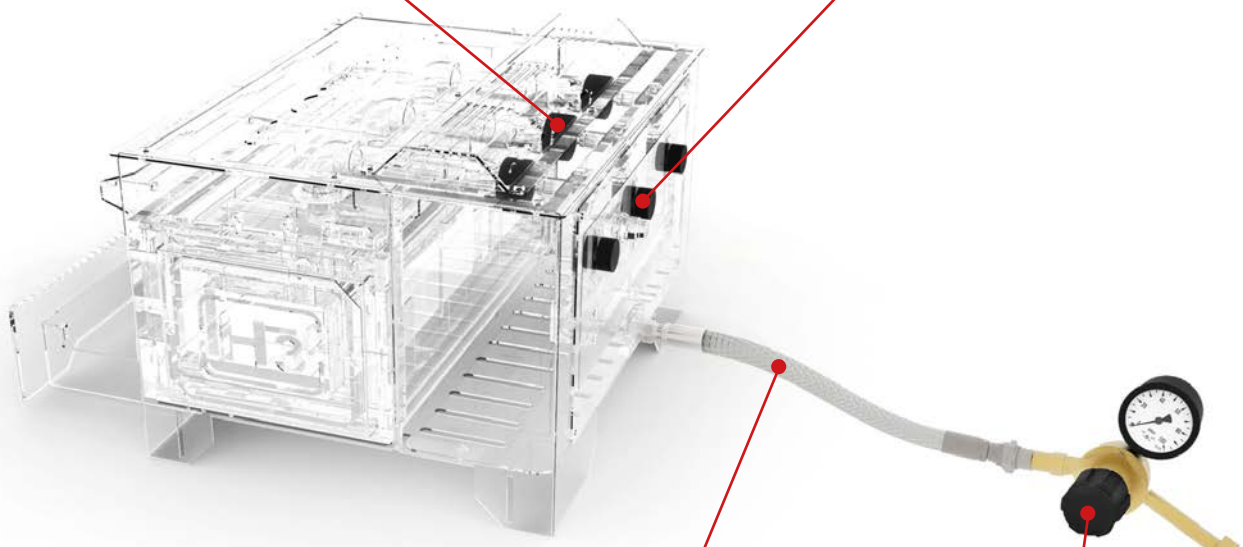

Gas hose made of stainless steel

This characteristic prevent it from collapsing and burning. This hose does not expire, so it is not necessary to replace it.

Precision pressure regulator with built-in pressure gauge

Allows to adjust the gas pressure more precisely.

To regulate the performance of Furnace H3 we have a control panel that enables us to keep the whole operation of the machine in a simple and intuitive way

Gas valve

The Control panel has got threes valves for the opening of the gas entrance to the Burners. The operator controls them in order to obtain more on less gas flow.

Electronic switching

Is the one that activates the spark plug and generates the spark to light up the Burner.

Thermocouple pushbutton

Is the one that opens the valve the get the thermocouple activated. This valve opens the path to the Gas valves

DETAILED FEATURES

H1

Fuel type	Propane gas (GLP)
Adjustable working pressure	0.1 - 1.5 bar
External dimensions	430x320x364 mm
Size of combustion chamber	140x236x100 mm
Weight	26 Kg

H2

Fuel type	Propane gas (GLP)
Adjustable working pressure	0.1 - 1.5 bar
External dimensions	440x500x364 mm
Size of combustion chamber	324x240x100 mm
Weight	38 Kg

H3

Fuel type	Propane gas (GLP)
Adjustable working pressure	0.1 - 1.5 bar
External dimensions	580x500x364 mm
Size of combustion chamber	464x240x100 mm
Weight	50 Kg

Maximum temperature			1300 ºC
			1300 ºC
			1300 ºC
Nr of burners			1
			2
			3
Power (Hi)			4 kW
			8 kW
			12 kW
Gas intake as 1 per bar	x 1 burner		0.35 Kg/h
	x 2 burners		0.7 Kg/h
	x 3 burners		1 Kg/h

EXTERNAL DIMENSIONS

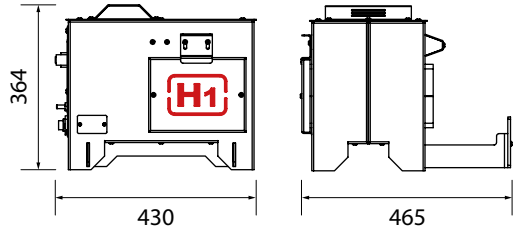

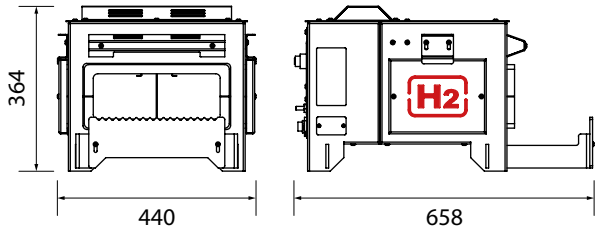

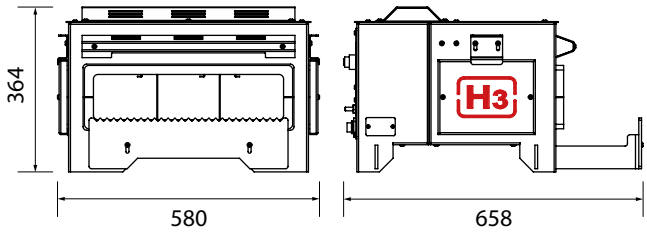

FRAGILE

CHARACTERISTICS OF THE PACKAGING

- Tariff Item Code: 84622110
- Gas furnace is delivered completely mounted.
- Complete wooden packaging NIMF15.

H1		H2		H3	
Width	700 mm	Width	700 mm	Width	700 mm
Length	400 mm	Length	600 mm	Length	600 mm
Height	520 mm	Height	520 mm	Height	520 mm
Volume	0,15 m^3	Volume	0,22 m^3	Volume	0,22 m^3
Nett weight	26 Kg	Nett weight	38 Kg	Nett weight	50 Kg
Gross weight	33 Kg	Gross weight	50 Kg	Gross weight	60 Kg

OUR RANGE OF MACHINERY

+info IRON WORKERS

+info SECTION BENDING MACHINES

+info HORIZONTAL PRESS BRAKES

+info TWISTING/SCROLL BENDING MACHINES

+info GAS FORGES

+info HYDRAULIC PRESS BRAKES

+info HYDRAULIC SHEAR MACHINES

+info IRON EMBOSSING MACHINES

+info END WROUGHT IRON MACHINES

+info POWER HAMMERS

+info BROACHING MACHINES

+info WELDING POSITIONERS

+info PRESSES FOR LOCKS

WARRANTY

Nargesa machines have 3 years warranty provided that the customer registers it in our website. Otherwise it would be only one year warranty. This one encloses any manufacturing default all along these 3 years for components. Any misuse is excluded from this condition. Labor, back and forth shipping and any eventual repair, are not included in this warranty.

Partner companies

SHIPMENT EVERYWHERE

Nargesa will arrange transport up to final destination, whenever the customers asks for so. There is also the possibility for the customer to arrange the shipment himself with his own agency.

TECHNICAL ASSISTANCE

All our customers have access to technical support quickly and efficiently.
90% of incidences are solved out on the phone, mail, Skype or videoconferencing in less than 24hours. In case of needing presencial technical assistance, we may as well send a technician to the customer's facilities.

Follow us on

PRADA NARGESA, S.L.
Ctra. De Garrigàs a Sant Miquel s/n
17476 Palau de Santa Eulalia (Girona) Spain
Tel. +34 972 568 085
www.nargesa.com
nargesa@nargesa.com

This information might undergo changes